Thermoplane - hybrid thermal airships

Peter Lobner, updated 11 February 2022

1. Introduction

The “Thermoplane” was a rigid, lenticular, heavy-lift, hybrid airship that generated its aerostatic lift from the combined effects of helium lift gas and hot air. With helium alone the airship was semi-buoyant (heavier-than-air). Buoyancy was managed by controlling the heating and cooling of air in a “thermal volume” that made up a large fraction of the volume of the broad, saucer-shaped hull, which was nicknamed the “Soviet UFO.”

This buoyancy control concept was developed and applied in the 1700s in hybrid balloons designed by Jean-François Pilâtre de Rozier. Such “Rozier” balloons have separate chambers for a non-heated lift gas (hydrogen or helium) and a heated lift gas (air).

The Thermoplane was intended to carry heavy loads from bases or remote sites without a mooring mast, operating year-round, including during severe winter weather in Siberia. Candidate applications included hauling timber, equipment for oil exploration and development, and other heavy industrial loads. Other applications included serving as an emergency evacuation vehicle (for sea disasters, earthquake relief etc.), a firefighting aircraft, a mobile hospital and a flying tourist hotel.

2. First there were the nuclear-powered Thermoplane concepts

Russian aeronautical engineer and author Y.S. Boyko reported in 2001 that the concept for an enormous nuclear-powered Thermoplane originally was developed in the early 1970s by the Obninsk Institute of Nuclear Power Engineering (OINPE). Their design had a rigid, composite hull measuring 1,500 m (4,921 ft) long, 300 m (984 ft) wide and 200 m (656 ft) high. Four nuclear reactors, based on a type used in Soviet nuclear-powered submarines, were used to heat air inside the hull to 350 °C (662 °F). This remarkable vehicle would have had a cargo capacity of 10,000 metric tons (11,000 tons) and would have remained constantly in the air, with

cargo being delivered and received with a platform lowered to the ground from the hovering airship.

Boyko reported that the nuclear-powered Thermoplane design concept was further developed by a student design bureau (SKB) at Moscow Aviation Institute (MAI), working in collaboration with OINPE from 1979 to 1982. The small MAI team was led by chief designer Yuri Ishkov, with scientific direction from Sergey Yeger. The MAI design was a more “modest” lenticular, rigid hull airship powered by a single nuclear reactor.

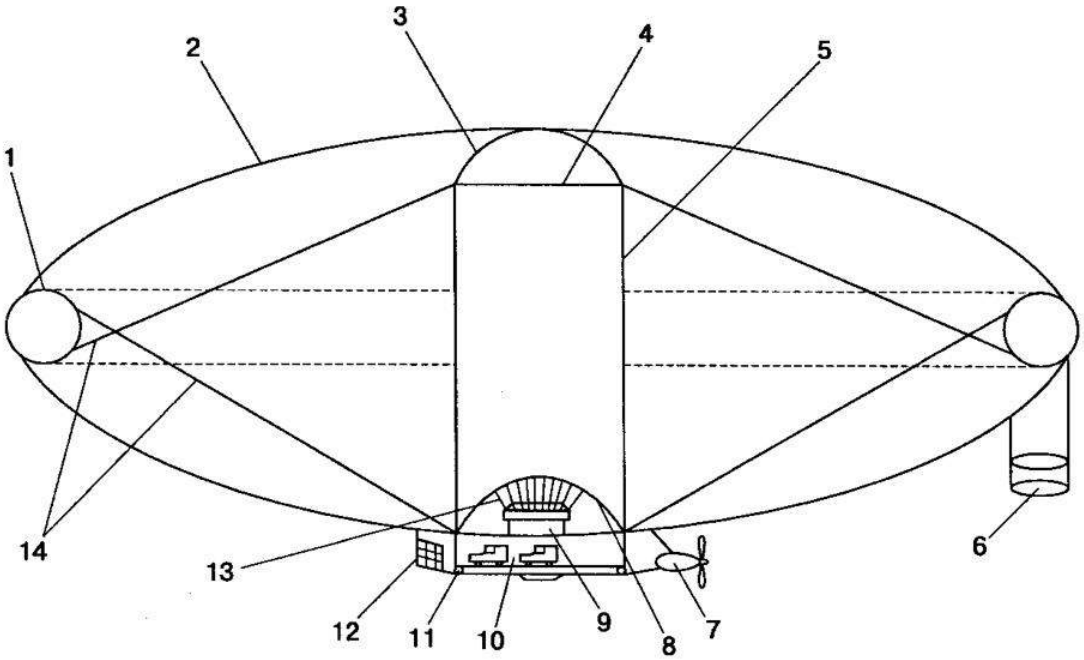

Legend

1 – Power torus, 2 – Outer shell (sheathing), 3 – Vault of the central cylinder, 4 – Power ring (supports the reactor), 5 – Central cylinder, 6 – Bi-plane horizontal stabilizer & vertical tail fins, 7 – Propulsion engines, 8 – Dome of the turbine hall, 9 – Nuclear power unit (NPU), 10 –Cargo compartment, 11 – Shock absorber, 12 – Crew & and passenger compartment, 13 – NPU suspension, 14 – Braces (reinforcing frames)

General arrangement of a conceptual nuclear-powered Thermoplane. Source: Boyko (2001)

The primary structure of the airship resembled a bicycle wheel, with a large, vertical, central cylinder (5) forming the hub, a toroidal ring (1,

the “power torus”) forming the rim, and structural braces (14) serving as spokes between the hub and rim. The reactor plant (9) was housed inside the central cylinder (5), supported from a “power ring” (4). A large circular gondola was supported under the central cylinder, housing the crew, passenger and cargo compartments (10, 12) and propulsion engines (7).

Helium lifting gas at positive pressure was in the power torus (1) and central cylinder (5). Hot air at atmospheric pressure was in the remainder of the airship’s hull volume. The airship structures were protected by layers of thermal insulation and were designed for an operating life of eight years.

General characteristics of the MAI nuclear-powered Thermoplane concept

Parameter	**MAI Nuclear-powered Thermoplane**
Diameter	300 m (984 ft)
Height	105 m (344 ft)
Powerplant	1 x 300 MWt nuclear reactor
Mass of reactor plant	450 metric tons (495 tons)
Mass of airframe	1,930 metric tons (2,123 tons)
Mass of thermal insulation	16% of the mass of the airframe
Mass of the shell	608 metric tons (669 tons)
Takeoff weight, max	3,600 to 4,100 metric tons (3,960 to 4,510 tons)
Payload, max	1,500 to 2,000 metric tons (1,650 to 2,200 tons)
Cargo compartment diam.	42 m (138 ft)
Cargo compartment height	12 m (39.4 ft)
Speed, max	180 kph (112 mph)
Altitude	5,000 m (16,404 ft)

3. Formation of Design Bureau "Thermoplan"

With help of MAI director Yuri Ryzhov, the SKB team obtained support from Gazprom in the mid-1980s and formed Design Bureau "Thermoplan" at the production site of the Ulyanovsk Aviation Production Complex (later known as the Aviastar Industrial Complex) at Simbirsk, about 500 km (311 miles) east of Moscow. The designs for a production non-nuclear Thermoplane and a 1/5th scale prototype, known as the ALA-40, were finalized in 1989, near the end of *perestroika* in the Soviet Union.

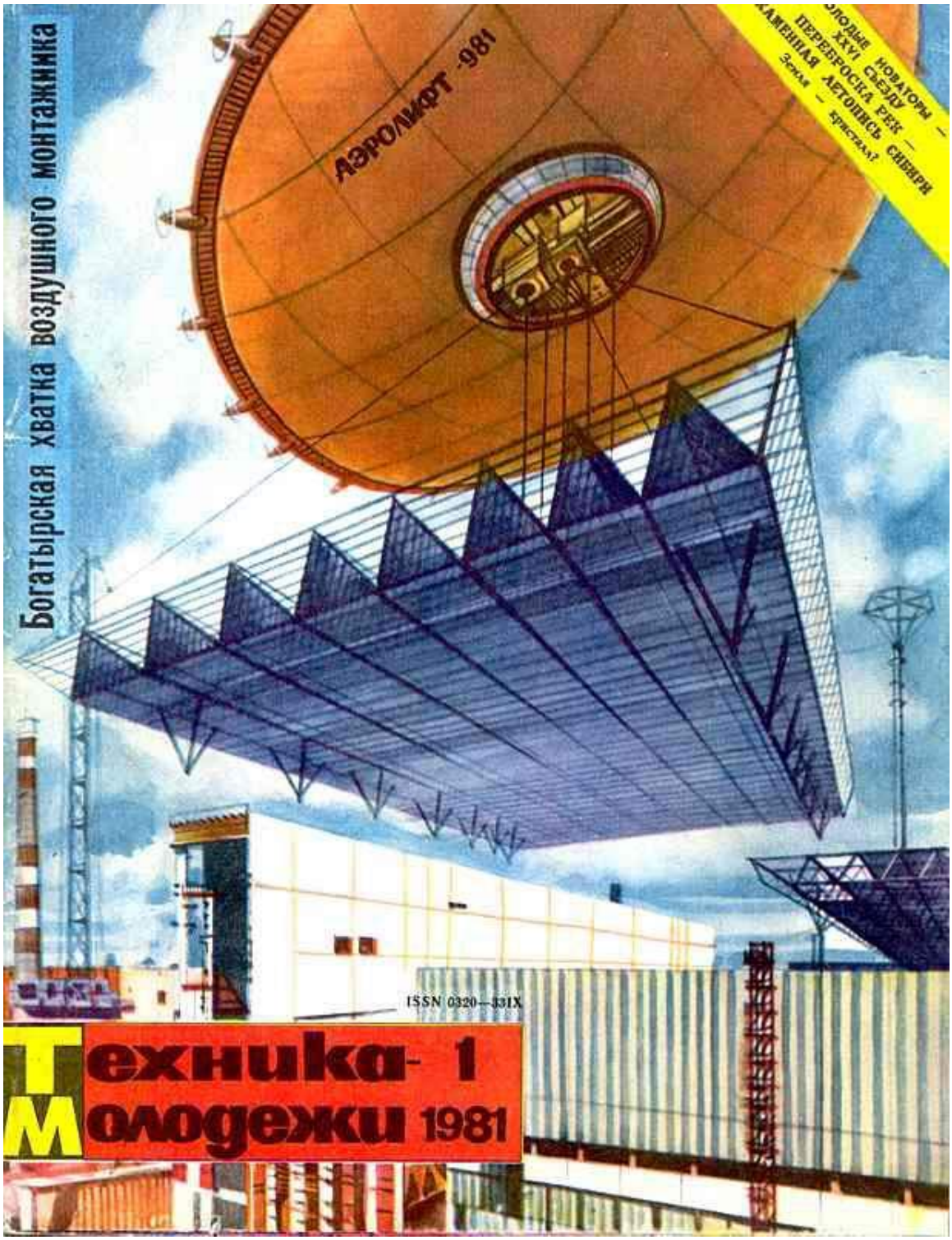

This 1981 Soviet magazine illustration entitled, "The hero grip of the airship," looks like a full-scale Thermoplane delivering a heavy construction load from a hover. Source: Soviet magazine "Technology for the Youth," 1981, Issue 1.

4. Managing buoyancy and conducting load exchanges

The Thermoplane is a variable buoyancy, hybrid thermal airship that generates aerostatic lift from the combined buoyancy of a fixed amount of helium lift gas (in about 60% of the envelope volume) and hot air at a variable temperature (in about 40% of the envelope volume), in separate chambers within the hull. The designers called this an “unballasted” airship (i.e., it did not need to take on or discharge external ballast during a load exchange). This also is called “thermo-ballasting.” With helium alone the airship is semi-buoyant (heavier-than-air).

Load exchanges would be conducted as follows:

- To pick up a load, the neutrally buoyant airship hovers and connects to a load on the ground. Then the air in the thermal volume is rapidly heated by diverting the exhaust gases from the engines directly into the thermal volume inside the hull. Maximum exhaust gas temperature was about 700 °C (1,292 °F). This hot gas rapidly increases gross lift and establishes positive buoyancy at the higher gross loaded weight. The loaded airship lifts off and proceed to the delivery site.

- To drop off a load, the neutrally buoyant airship establishes a hover over the delivery site and slowly descends to place the load on the ground. Hot air in the thermal volume is vented and ambient cool air is introduced in the correct proportions to gradually decrease gross lift during a hover and allow the weight of the load to be transferred to the ground. Then, the unloaded, neutrally buoyant airship can disconnect the load and proceed to its next destination.

This arrangement for heating the thermal volume had the potential to cause operational problems:

- The high exhaust gas temperature created a significant risk of damaging composite structures or burning through the shell.
- Soot from the engine exhaust deposited inside the hull and would have required regular cleaning.

5. The 1/5-scale prototype, ALA-40

The first prototype, ALA-40-01, was constructed at the Ulyanovsk Complex (now Aviastar). It was completed in early 1992 and rolled out on 28 August 1992.

Profile view, bow is at left. Source: secretprojects.co.uk

Profile view, bow is at right. Source: Screenshot from video

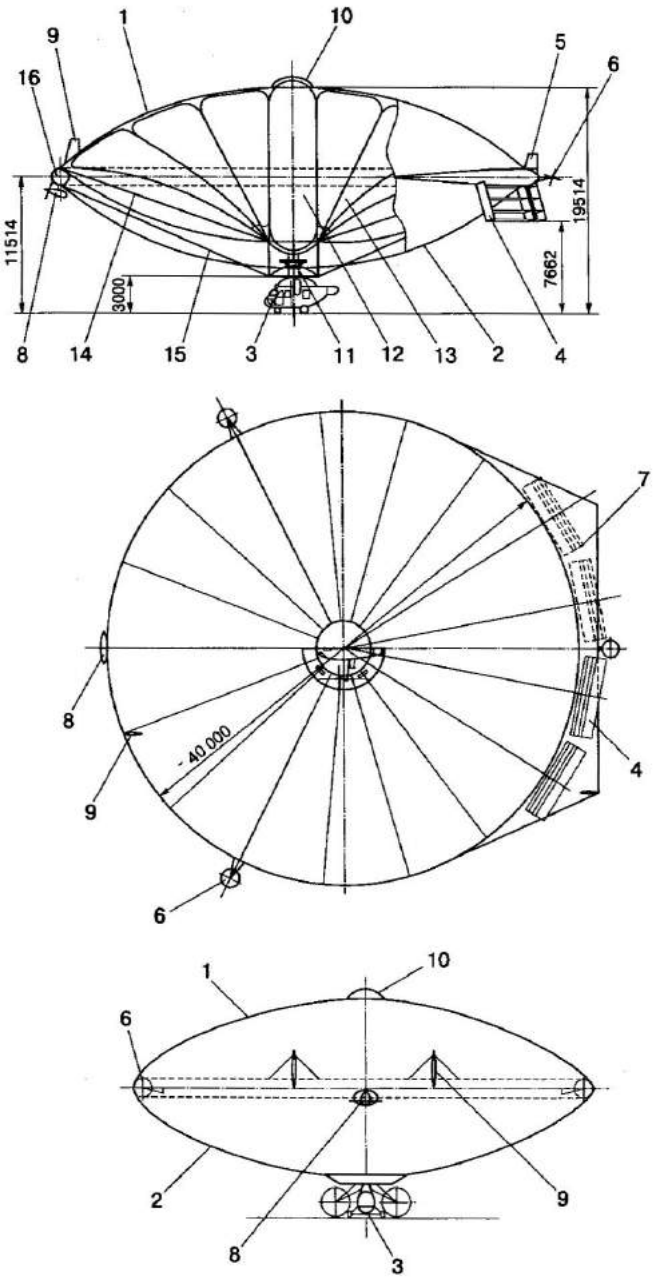

Legend

1 - upper shell; 2 - bottom shell; 3 - external suspension got the gondola; 4 - horizontal tail; 5 - vertical all-moving tail; 6 – vertical thrust power plants; 7 – tail fairing stabilizer; 8 – propulsion engine: 9 - bow vertical all-moving tail; 10 - dome: 11 - intermediate module and exhaust manifolds from the turbine engines; 12 - central support cylinder; 13 - helium compartments; 14 - thermal volume: 15 - cable suspension for the gondola:, 16 – "power torus" circumferential structure

General arrangement of the Thermoplane ALA-40
Source: Boyko (2001)

General characteristics of the ALA-40-01 prototype

Parameter	**ALA-40-01 prototype**
Diameter	40 m (131 feet)
Hull thickness, max	16 m (52.5 ft)
Envelope volume	Volume: 10,660 cubic meters (376,450 cubic feet), containing two compartments, one for helium and one for hot air. • One 5,800 cubic meters (204,825 cubic feet) sealed compartment for helium at the top of the envelope • One 4,860 cubic meters (171,629 cubic feet) compartment at the bottom of the envelope functioned as a thermal volume (*termoobema*), containing hot air that was heated by the high temperature exhaust from the propulsion engines
Envelope material	Thermoplastic with carbon fiber reinforcement based on Torlon
Weight, max takeoff	8,500 kg (18,739 lb)
Weight, empty	6,150 kg (13,558 lb)
Payload	2,150 to 3,000 kg (4,740 to 6,614 lb) (Note: some sources claim 5,000 to 6,000 kg)
Crew	Two
Propulsion and control	• 2 x Klimov GTD-350 turboshaft engines rated @ 240 kW (320 hp) each provide air heating only • 1 x Vedeneyev M14P air-cooled radial engine rated @ 268 kW (360 hp) provides propulsion and air heating • 2 x EDUVT motors for vertical propulsion rated @ 37.3 kW (50 hp) each
Speed, max	80 kph (50 mph)
Altitude	Up to 2,000 m (6,562 ft)

The ALA-40-01 rear quarter view in its hanger at the Ulyanovsk Complex (now Aviastar). Source: Russian Aeronautical Society

Close-up of ALA-40-01 aerodynamic control surfaces & extended equatorial fairing at the stern. Source: Russian Aeronautical Society

Wide-angle view of the ALA-40-01 and dignitaries posing under the stern of the airship. Note the extended equatorial fairing above the horizontal control surfaces.
Source: http://topsecretairplanes.blogspot.com/

Front view of the ALA-040-01 during roll out. Source: avon-62

Stern view of the ALA-040-01 as it was rolled out of its hanger for the first time to conduct field trials. Source: YouTube screenshot

Close-up of the stern control surfaces on the ALA-040-01. Source: YouTube screenshot

The ALA-040-01 gondola was the fuselage (minus the tail) of a Mil Mi-2 helicopter. The exhaust from the 2 x Klimov GTD-350 turboshaft engines served to heat the air in the thermal volume. Source: YouTube screenshot

The Vedeneyev M14P air-cooled radial engine mounted on the nose of the ALA-40-01 provided propulsion and the engine exhaust served to heat the air in the thermal volume. Source: YouTube screenshot

Starting in the fall of 1991, the ALA-40-01 was put through a series of ground tests of airship systems and tethered tests that demonstrated the modes of air heating in the shell compartments under various

atmospheric conditions and the operation of the propulsion and lift engines.

The ALA-40-01 prototype never took off. It has been reported that, during a celebration banquet on the evening after the roll-out on 28 August 1992, the prototype, “was shaking with the wind and it was beating against the hangar.” Immediate efforts failed to stabilize the craft during the windstorm, the shell deformed and ruptured due to the effects of the wind, the helium cell was damaged and the helium released, and the airship structure collapsed over the gondola. The remains of the first prototype were stored at the Ulyanovsk Complex until 2008 when they were recycled. The damaged torus and other parts were used to build a catamaran boat.

Originally, three 1/5th scale prototypes were planned. After the first prototype was destroyed, the project was placed on hold due to the economic crisis in the Russian Federation in the early 1990s. The second prototype (ALA-40-02) was started in 1995, but lack of funding stopped construction.

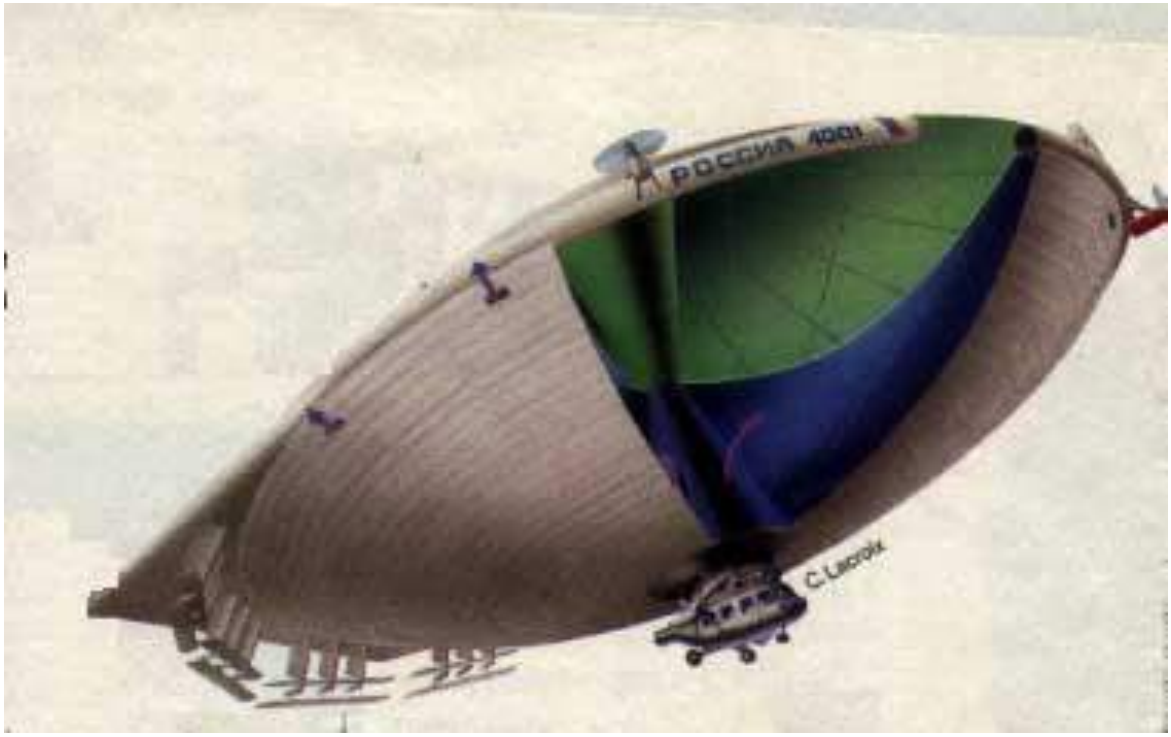

Rendering of an ALA-40 in flight. Source: jb.aeronef

6. Plans for production versions of the Thermoplane

After the design had been validated with the subscale prototypes, the original plan was to build the first production model, known variously as the ALA-200 and the ALA-600.

General characteristics of the ALA-200 / 600

Parameter	ALA-200 / 600 Thermoplanes
Diameter	200 meters (656 feet)
Payload	600 metric ton (660 ton) cargo or up to 1,500 passengers
Speed, cruise	140 kph (87 mph).
Range	5,000 km (3,107 miles)

As in the ALA-40 prototype, heating the thermal volume, equivalent to 40% of the total volume of the envelope, was done by recovering the exhaust gases from the turboprop engines used for propulsion.

The original target date for ALA-200/600 first flight was 1995. After the ALA-200/600, the designers intended to develop a whole family of lenticular Thermoplanes with different carrying capacities, for example, 100, 300, 600 and 1,500 metric tons of cargo (or 500, 800, 1,200 and 2,000 passengers, respectively), and cruise speeds up to 200 kph (124 mph).

A full-scale Thermoplane was not built.

Rendering of the ALA-200 and the ALA-40 Thermoplanes showing relative scale.
Note the fuselage of an An-124 transport aircraft is used as the ALA-200's gondola.
Source: jb.aeronef

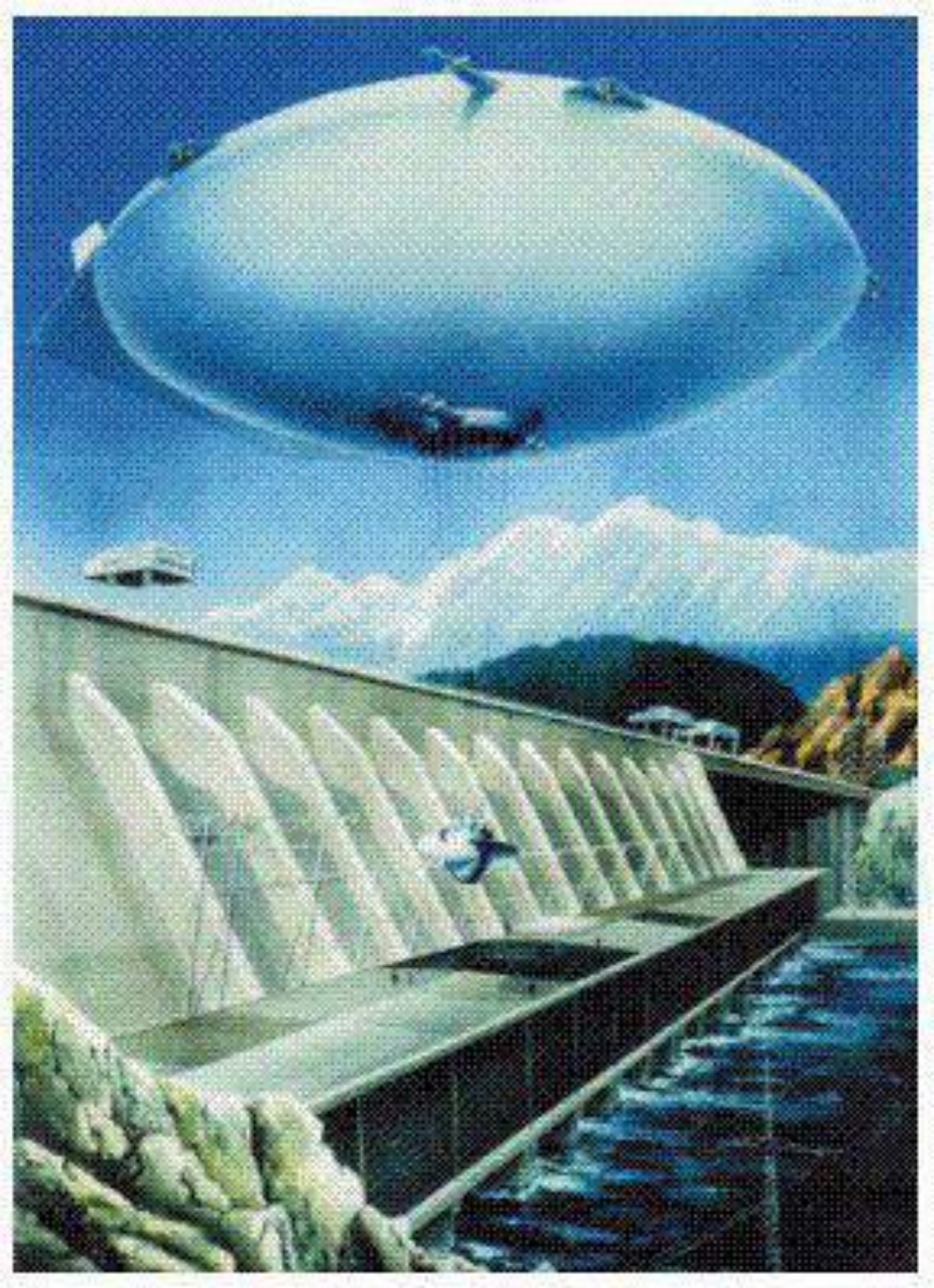

Concept drawing of a heavy-lift Thermoplane delivering a large component at a hydroelectric dam site. Source: Bashny.net

7. Thermoplane legacy

Thermoplane led to the development in Russia of two other hybrid thermal airships with similar operating principles and lenticular designs, the LocomoSkyner developed by the firm LokomoSky in Ulyanovsk and the Aerosmena developed by Russian engineer Orpheus (Orfey) Kozlov and the Aeroplatform Initiative Design Bureau A (AIDBA) in Moscow.

8. For more information

- Yu.S. Boyko, "Aeronautics: Tethered, Free, Managed," pp. 394 – 396 (in Russian), ISBN 5.8122-0233-8, Publishing house MGUP, Moscow, Russia, 2001
- "Modern Russian Aircraft: Part 1," avon-62: https://avon-62.ru/en/finansy/dirizhabl-v-nashe-vremya-boevye-dirizhabli-prikroyut-rossiyu-ot-raketnogo/
- L. P. Ponyaav, et al., "New Arctic air transportation with hybrid electrical disc-shaped airship and body plane aircraft innovation," 2020 IOP Conference Series: Earth Environmental Science, 539 012134: https://iopscience.iop.org/article/10.1088/1755-1315/539/1/012134/pdf

Videos

- "ALA-40 Thermoplane - 'Flying Saucer' Airship," (0:56 min), Husar101: https://www.youtube.com/watch?v=szasukfWXTU
- "Russian UFO ALA-40 (1992)," (0:54 min, silent): https://youtu.be/Oruen8Zt7_c
- "UFO from Russia," (8:01 min, Termoplan starts at about 1:35 min), Russia Today: https://youtu.be/BbNv8PJ5SdI

Other *Modern Airships* articles

- *Modern Airships - Part 1*: https://lynceans.org/all-posts/modern-airships-part-1/
- *Modern Airships - Part 2*: https://lynceans.org/all-posts/modern-airships-part-2/

    - LocomoSky - hybrid thermal airships
    - Aerosmena - hybrid thermal airships
    - Thermo-Skyships Ltd. (TSL) - hybrid thermal airships
    - Boeing - hybrid thermal airship
- *Modern Airships - Part 3*: https://lynceans.org/all-posts/modern-airships-part-3/